BALMER® ARCHITECTURAL MOULDINGS

Edinburgh 4117-TC
Noncombustible Fireplace Mantel Fact Sheet

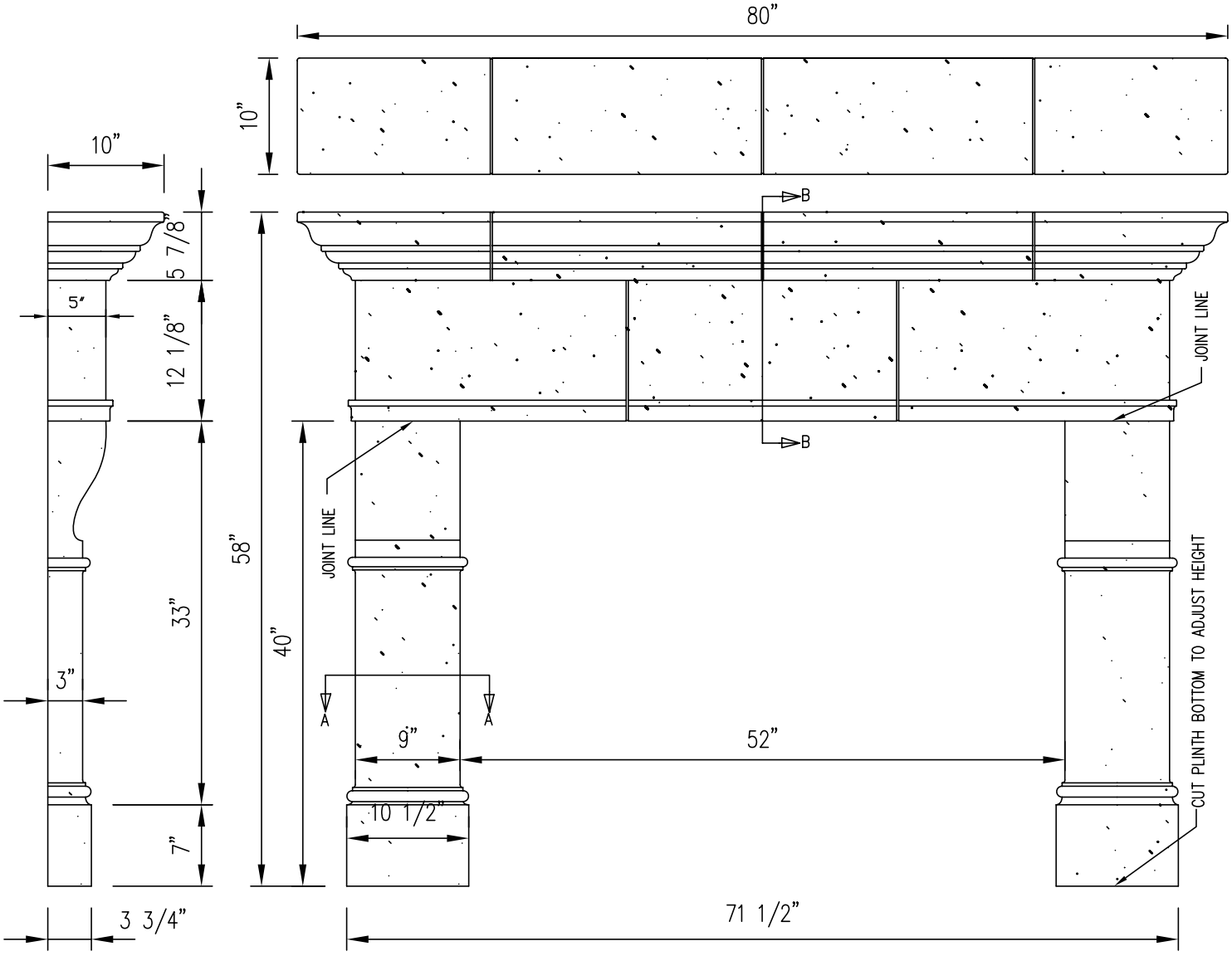

FEATURES AND SPECIFICATIONS

Material meets the requirements for non-combustibility in accordance with ASTM E-136

- High definition, crisp details
- Adjustable height
- Fast, easy installation
- Material is sealed from the factory and requires no further finishing
- Supplied in 3 pieces
- Net weights:
  - Complete mantel: 140 lbs
  - Mantel top: 90 lbs
  - Each mantel leg: 25 lbs
- Crated weight: 170 lbs

Marble, stone, or other noncombustible filler panel material (not supplied with mantel) combined with adhesive must accommodate 1" cavity at mantel legs to support the bearing surface of the inside edges of the mantel shelf and legs against the wall on the firebox side, and to cover the wall area between the firebox opening and mantel components. At least 1" of the surround filler panel should extend behind the inside edges of the mantel for support.

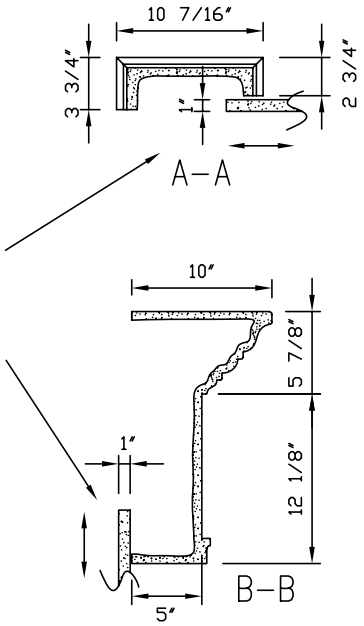

All dimensions & weights are approximate

DO NOT SCALE

Copyright (c) 2004 Architectural Moldings Ltd.
Information contained in this drawing shall not be copied or used without the express permission of Architectural Moldings Ltd.

Date: Jan. 5, 2007